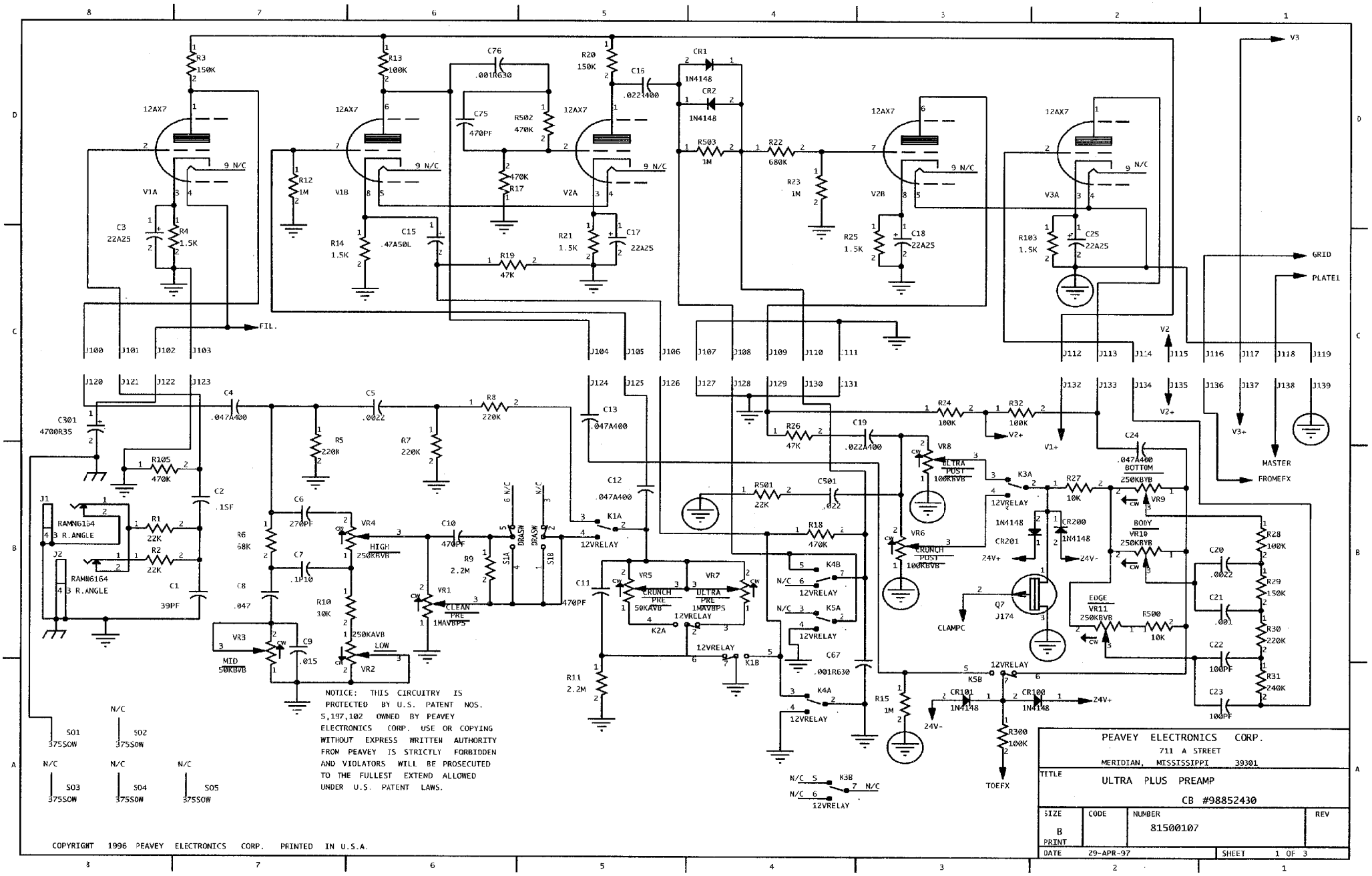

NOTICE: THIS CIRCUITRY IS PROTECTED BY U.S. PATENT NOS. 5,197,102 OWNED BY PEAVEY ELECTRONICS CORP. USE OR COPYING WITHOUT EXPRESS WRITTEN AUTHORITY FROM PEAVEY IS STRICTLY FORBIDDEN AND VIOLATORS WILL BE PROSECUTED TO THE FULLEST EXTEND ALLOWED UNDER U.S. PATENT LAWS.

COPYRIGHT 1996 PEAVEY ELECTRONICS CORP. PRINTED IN U.S.A.

PEAVEY ELECTRONICS CORP.
711 A STREET
MERIDIAN, MISSISSIPPI 39301

TITLE: ULTRA PLUS PREAMP

CB #98852430

SIZE	CODE	NUMBER	REV
B PRINT		81500107	
DATE 29-APR-97		SHEET 1 OF 3	

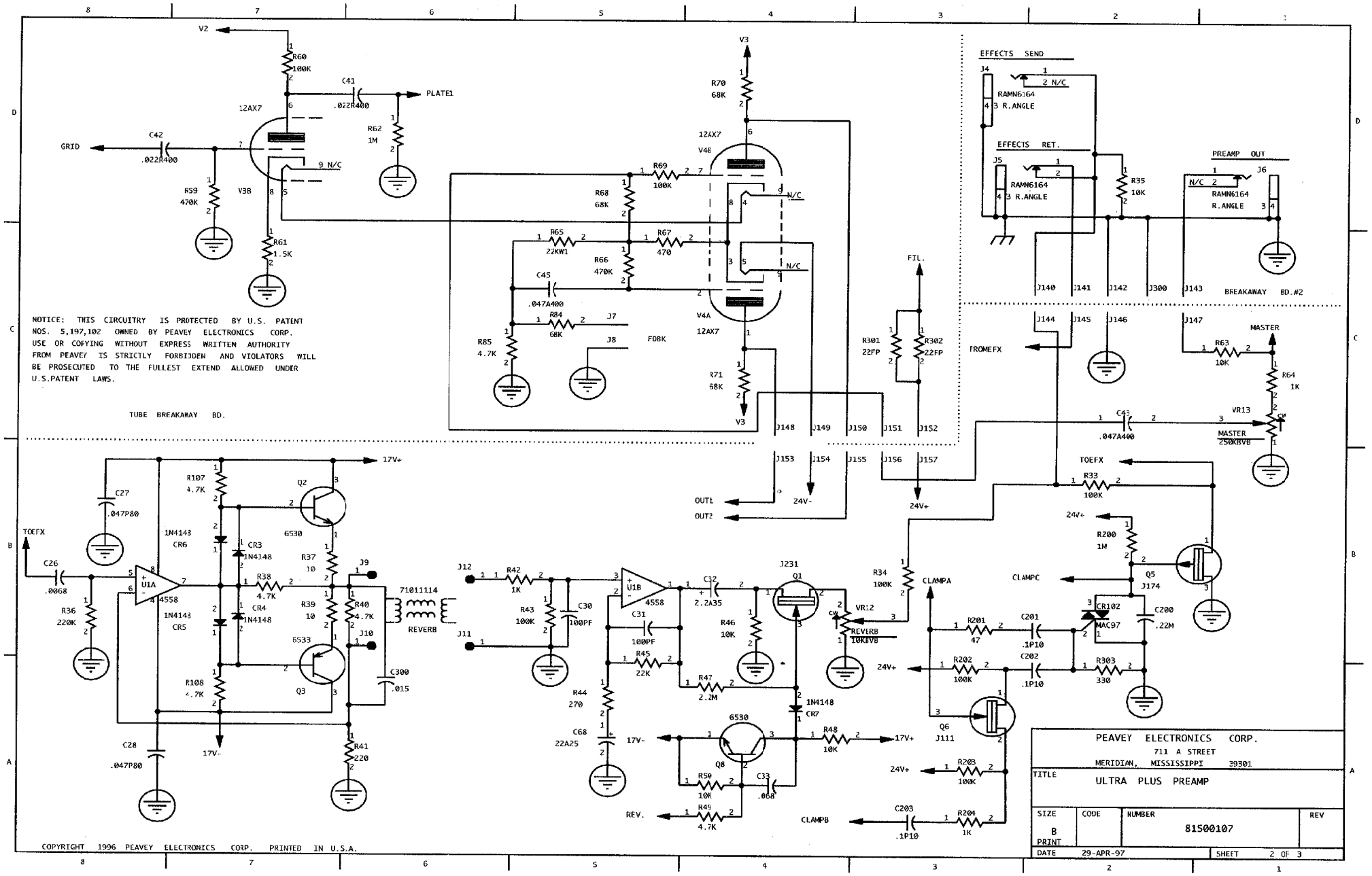
V2
R60 100K
C41 .022A400
PLATE1
12AX7
GRID
C42 .022A400
R62 1M
R59 470K
V3B
9 N/C
R61 1.5K
V3
R70 68K
12AX7
V4B
R69 100K
R68 68K
R65 22KW1
R67 470
R66 470K
C45 .047A400
R84 68K
J7
J8
FDBK
R85 4.7K
V4A
12AX7
R71 68K
N/C
FIL.
R301 22FP
R302 22FP
EFFECTS SEND
J4
RAMN6164 R.ANGLE
EFFECTS RET.
J5
RAMN6164 R.ANGLE
R35 10K
PREAMP OUT
J6
RAMN6164 R.ANGLE
J140
J141
J142
J300
J143
BREAKAWAY BD.#2
J144
J145
J146
J147
FROMEFX
MASTER
R63 10K
R64 1K
VR13
MASTER 250KBVB
C43 .047A400
J148
J149
J150
J151
J152
J153
J154
J155
J156
J157
OUT1
OUT2
24V-
24V+
TOEFX
R33 100K
NOTICE: THIS CIRCUITRY IS PROTECTED BY U.S. PATENT NOS. 5,197,102 OWNED BY PEAVEY ELECTRONICS CORP. USE OR COPYING WITHOUT EXPRESS WRITTEN AUTHORITY FROM PEAVEY IS STRICTLY FORBIDDEN AND VIOLATORS WILL BE PROSECUTED TO THE FULLEST EXTEND ALLOWED UNDER U.S.PATENT LAWS.
TUBE BREAKAWAY BD.
17V+
C27 .047P80
R107 4.7K
Q2
6530
1N4148 CR6
CR3 1N4148
R37 10
J9
TOEFX
C26 .0068
U1A 4558
R38 4.7K
CR4 1N4148
R39 10
R40 4.7K
J10
71011114
REVERB
R36 220K
1N4148 CR5
6533
Q3
C300 .015
R108 4.7K
C28 .047P80
17V-
R41 220
J12
R42 1K
R43 100K
C30 100PF
J11
U1B 4558
C32 2.2A35
C31 100PF
R45 22K
R46 10K
J231
Q1
VR12
REVERB 10KBVB
R47 2.2M
R44 270
C68 22A25
1N4148 CR7
6530
Q8
R48 10K
R50 10K
C33 .068
R49 4.7K
REV.
CLAMPB
C203 .1P10
R204 1K
R203 100K
R34 100K
CLAMPA
CLAMPC
R200 1M
Q5 J174
CR102 MAC97
C200 .22M
R201 47
C201 .1P10
R202 100K
C202 .1P10
R303 330
Q6 J111
PEAVEY ELECTRONICS CORP.
711 A STREET
MERIDIAN, MISSISSIPPI 39301
TITLE
ULTRA PLUS PREAMP
SIZE B PRINT
CODE
NUMBER 81500107
REV
DATE 29-APR-97
SHEET 2 OF 3
COPYRIGHT 1996 PEAVEY ELECTRONICS CORP. PRINTED IN U.S.A.

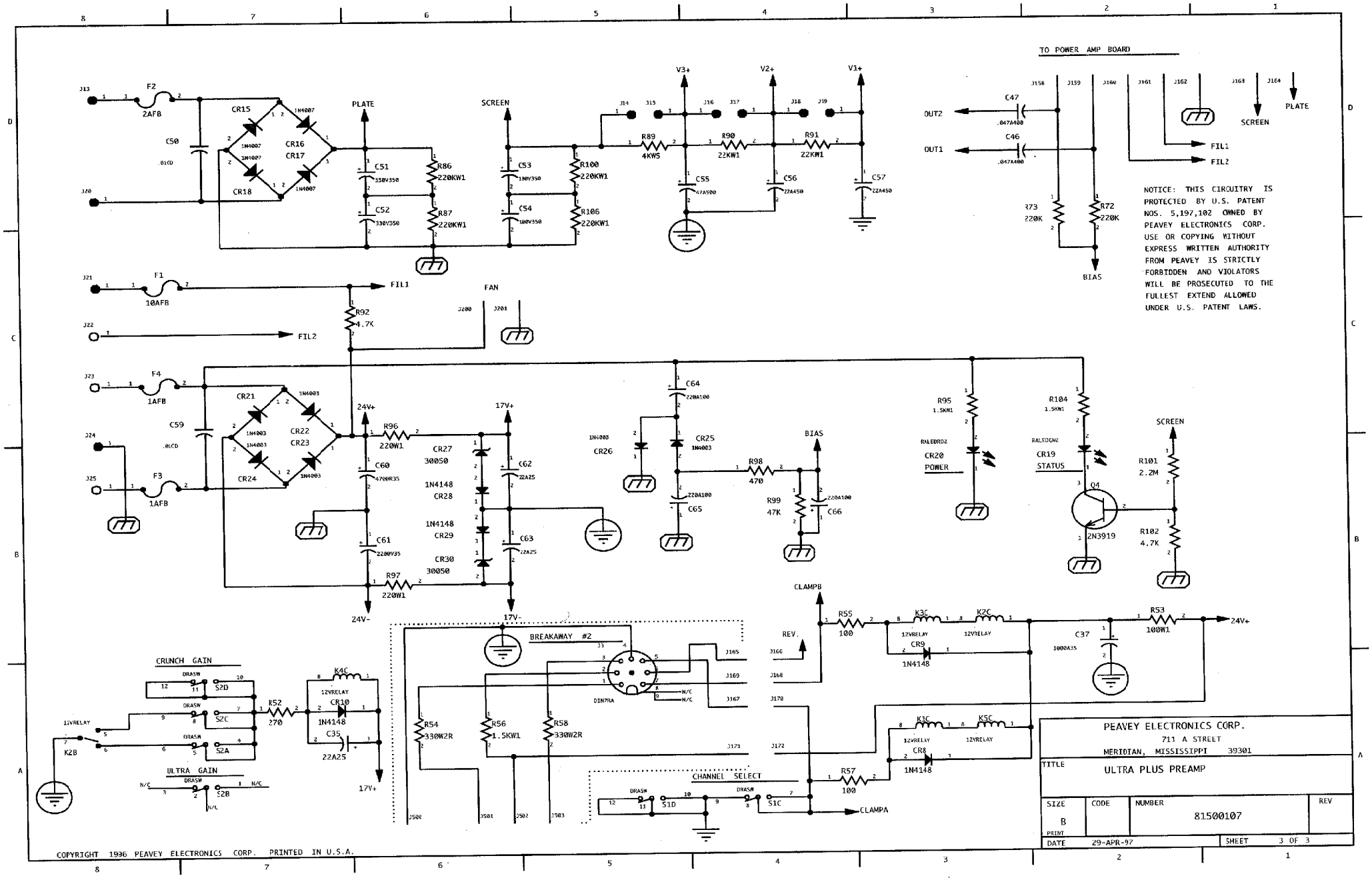
TO POWER AMP BOARD
OUT2
OUT1
C47
C46
R73
220K
R72
220K
BIAS
FIL1
FIL2
SCREEN
PLATE
NOTICE: THIS CIRCUITRY IS PROTECTED BY U.S. PATENT NOS. 5,197,102 OWNED BY PEAVEY ELECTRONICS CORP. USE OR COPYING WITHOUT EXPRESS WRITTEN AUTHORITY FROM PEAVEY IS STRICTLY FORBIDDEN AND VIOLATORS WILL BE PROSECUTED TO THE FULLEST EXTEND ALLOWED UNDER U.S. PATENT LAWS.
PLATE
SCREEN
V3+
V2+
V1+
F2
2AFB
C50
CR15
CR16
CR17
CR18
C51
C52
R86
220KW1
R87
220KW1
C53
C54
R100
220KW1
R106
220KW1
R89
4KW5
R90
22KW1
R91
22KW1
C55
C56
C57
F1
10AFB
FIL1
FIL2
FAN
R92
4.7K
F4
1AFB
F3
1AFB
C59
CR21
CR22
CR23
CR24
24V+
17V+
R96
220W1
C60
C61
R97
220W1
CR27
30050
1N4148
CR28
1N4148
CR29
CR30
30050
C62
C63
24V-
17V-
C64
CR26
CR25
C65
R98
470
R99
47K
C66
BIAS
R95
1.5KW1
CR20
POWER
R104
1.5KW1
CR19
STATUS
Q4
2N3919
R101
2.2M
R102
4.7K
SCREEN
CLAMPB
REV.
R55
100
K3C
K2C
CR9
1N4148
C37
R53
100W1
24V+
BREAKAWAY #2
DIN7RA
R54
330W2R
R56
1.5KW1
R58
330W2R
CRUNCH GAIN
S2D
S2C
S2A
K2B
R52
270
K4C
CR10
1N4148
C35
22A25
17V+
ULTRA GAIN
S2B
CHANNEL SELECT
S1D
S1C
CLAMPA
K1C
K5C
CR8
1N4148
R57
100
PEAVEY ELECTRONICS CORP.
711 A STREET
MERIDIAN, MISSISSIPPI 39301
TITLE
ULTRA PLUS PREAMP
SIZE
B
CODE
NUMBER
81500107
REV
DATE
29-APR-97
SHEET
3 OF 3
COPYRIGHT 1996 PEAVEY ELECTRONICS CORP. PRINTED IN U.S.A.

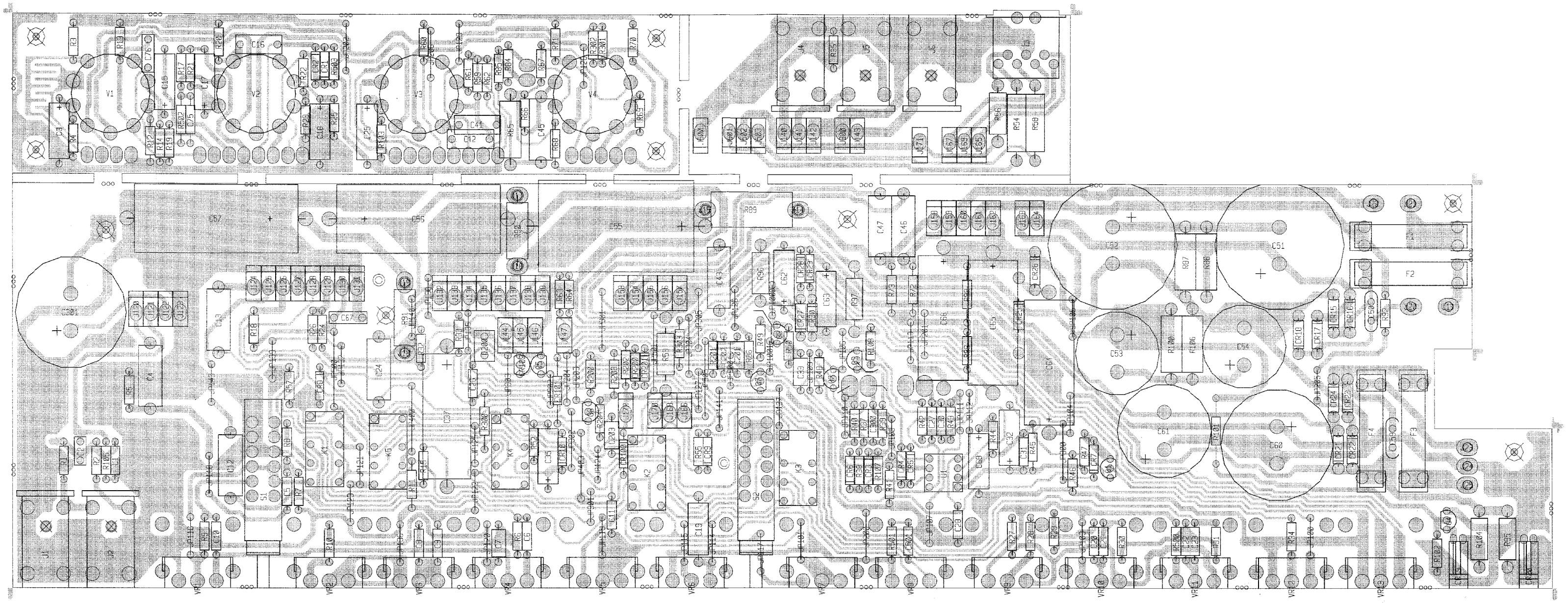

Ultra Plus Preamp

BOARD NAME: ULTRA PLUS PREAMP

** QTY.	PART NAME	VALUE	PART NUMBER	DESCRIPTION AND DEVICE DESIGNATIONS **********
1	39PF	39PF	70340052	39PF———50VDC—T/C—T&R C1
1	.1SF	.1SF	70330113	0.10 MFD 10% 100V STCK FILM T&A C2
1	22A25	22A25	70320012	22MFD +/-20% 25VDC EL AXL C3
1	.047A400	.047A400	70320105	.047MFD 450 VOLT T&R CAP C4
1	.0022	.0022	70340004	.0022MF-10%—50VDC—T/C—T&R C5
1	270PF	270PF	70340057	270PF—10%—50VDC—T/C—T&R C6
1	.1P10	.1P10	70340101	.1MF——10%—50VDC—MON—T&R C7
1	.047	.047	70340017	.047MF—10%—50VDC—MON—T&R C8
1	.015	.015	70340010	.015MF—10%—50VDC—T/C—T&R C9
2	470PF	470PF	70340058	470PF—10%—50VDC—T/C—T&R C10, C11
2	.047A400	.047A400	70320105	.047MFD 450 VOLT T&R CAP C12, C13
1	.47A50L	.47A50L	70340063	.47MFD 50V LOW LEAKAGE C15
1	.022R400	.022R400	70320106	.022 MFD 400V RADIAL MYLAR C16
2	22A25	22A25	70320012	22MFD +/-20% 25VDC EL AXL C17, C18
1	.022A400	.022A400	70320283	.022MF-400V-T&R-CAP C19
1	.0022	.0022	70340004	.0022MF-10%—50VDC—T/C—T&R C20
1	.001	.001	70340000	.001MF—10%—50VDC—MON—T&R C21
2	100PF	100PF	70340054	100PF—10%—50VDC—T/C—T&R C22, C23
1	.047A400	.047A400	70320105	.047MFD 450 VOLT T&R CAP C24
1	22A25	22A25	70320012	22MFD +/-20% 25VDC EL AXL C25
1	.0068	.0068	70340008	.0068MF-10%—50VDC—MON—T&R C26
2	.047P80	.047P80	70340016	.047MF-+80-20%-50VDC—MON—T&R C27, C28
2	100PF	100PF	70340054	100PF—10%—50VDC—T/C—T&R C30, C31
1	2.2A35	2.2A35	70320200	2.2MFD 35VDC LY.CAP T&R C32
1	.068	.068	70340018	.068MF—10%—50VDC—MON—T&R C33
1	22A25	22A25	70320012	22MFD +/-20% 25VDC EL AXL C35
1	1000A35	1000A35	70320038	1000 MFD 35VDC LYTIC CAP C37
2	.022R400	.022R400	70320106	.022 MFD 400V RADIAL MYLAR C41, C42
4	.047A400	.047A400	70320105	.047MFD 450 VOLT T&R CAP C43, C45, C46, C47
1	.01CD	.01CD	70320248	.01MF—20%-1000VDC-CD-T&A C50
2	330V350	330V350	70320169	330 MFD 350 VDC VERT. SNAP-IN C51, C52
2	100V350	100V350	70320130	100 MFD 350VDC RADIAL SNAP-IN C53, C54
1	47A500	47A500	70320005	47MF 500VDC ELECTROLYTIC -AXIAL C55
2	22A450	22A450	70320020	22 MFD 450VDC LYTIC CAP C56, C57
1	.01CD	.01CD	70320248	.01MF—20%-1000VDC-CD-T&A C59
1	4700R35	4700R35	70350200	4700 MFD 35VDC RADIAL SNAP-IN C60
1	2200V35	2200V35	70320113	2200 MFD 35VDC RADIAL LYTIC C61
2	22A25	22A25	70320012	22MFD +/-20% 25VDC EL AXL C62, C63
3	220A100	220A100	70320017	220 MFD 100VDC LYTIC CAP C64, C65, C66
1	.001R630	.001R630	70320160	.001MFD 630VDC B-BOX C67
1	22A25	22A25	70320012	22MFD +/-20% 25VDC EL AXL C68
1	470PF	470PF	70340058	470PF—10%—50VDC—T/C—T&R C75
1	.001R630	.001R630	70320160	.001MFD 630VDC B-BOX C76
1	.22M	.22M	70330128	.22M 5% 50vdc my T&A C200
3	.1P10	.1P10	70340101	.1MF——10%—50VDC—MON—T&R C201, C202, C203
1	.015	.015	70340010	.015MF—10%—50VDC—T/C—T&R C300
1	4700R35	4700R35	70350200	4700 MFD 35VDC RADIAL SNAP-IN C301
1	.022	.022	70340012	.022MF—10%—50VDC—MON—T&R C501
10	1N4148	4148	70464148	1N4148 75V 10MA SILICON DIODE CR1, CR2, CR3, CR4, CR5, CR6, CR7, CR8, CR9, CR10
4	1N4007	1N4007	70464007	1N4007 1KV, 1A, SILICON DIODE CR15, CR16, CR17, CR18
1	RALEDGN2	RALEDGN2	70450578	SE-8721-D-GN-25MM LDS REC - RIGHT ANGLE CR19
1	RALEDRD2	RALEDRD2	70450577	SE-8711-D-RD-25MM LDS REC - RIGHT ANGLE CR20
6	1N4003	1N4003	70464003	1N4003 200V SILICON DIODE CR21, CR22, CR23, CR24, CR25, CR26
1	30050	30050	70430050	SZP30050 16V 1 WATT 5% ZENER DIODE T&R CR27
2	1N4148	4148	70464148	1N4148 75V 10MA SILICON DIODE CR28, CR29
1	30050	30050	70430050	SZP30050 16V 1 WATT 5% ZENER DIODE T&R CR30
2	1N4148	4148	70464148	1N4148 75V 10MA SILICON DIODE CR100, CR101
1	MAC97	MAC97	70460097	MAC97-6 400V .6A TO-92 TRIAC T&A CR102
2	1N4148	4148	70464148	1N4148 75V 10MA SILICON DIODE CR200, CR201
1	10AFB	10AFB	70900370	10 AMP F/B FUSE WITH 2 FUSECLIPS #70900816 F1
1	2AFB	2AFB	70900133	AGC 2 AMP FUSE F2
2	1AFB	1AFB	70900085	AGC 1 AMP FUSE with 2 fuseclips #70900816 F3, F4
2	RAMN6164	71466164	71466164	JK R/A 12.5MM NIN MONO -88 J1, J2
1	DIN7RA	71466226	71466226	CONN 7P R/A PCMNT DIN W/ 4 MNT. HOLES J3
3	RAMN6164	71466164	71466164	JK R/A 12.5MM NIN MONO -88 J4, J5, J6
2	SPX1D	SPX1D	73717003	1 STAKE PIN J7, J8
4	MMPD	73711812	73711812	R93-12 PN C.B. MALE MOLEX PIN J9, J10, J11, J12
9	MMPU	73711812	73711812	R93-12 PN C.B. MALE MOLEX PIN J13, J14, J15, J16, J17, J18, J19, J20, J21
2	FMPU	73711811	73711811	M118-171 C.B. FEMALE MOLEX PIN J22, J23
1	MMPU	73711812	73711812	R93-12 PN C.B. MALE MOLEX PIN J24
1	FMPU	73711811	73711811	M118-171 C.B. FEMALE MOLEX PIN J25
20	SPX1D	SPX1D	73717003	1 STAKE PIN J100, J101, J102, J103, J104, J105, J106, J107, J108, J109, J110, J111, J112, J113, J114, J115, J116, J117, J118, J119
28	SPX1U	SPX1U	73717003	1 STAKE PIN J120, J121, J122, J123, J124, J125, J126, J127, J128, J129, J130, J131, J132, J133, J134, J135, J136, J137, J138, J139, J140, J141, J142, J143, J144, J145, J146, J147
5	SPX1D	SPX1D	73717003	1 STAKE PIN J148, J149, J150, J151, J152
27	SPX1U	SPX1U	73717003	1 STAKE PIN J153, J154, J155, J156, J157, J158, J159, J160, J161, J162, J163, J164, J165, J166, J167, J168, J169, J170, J171, J172, J200, J201, J300, J500, J501, J502, J503
5	12VRELAY	71322277	71322277	DPDT OMRON RELAY 12VDC K1, K2, K3, K4, K5
4	125SOWD	70900788	70900788	SPACER, 1/8,R(#4),.187 SWAGE ALUM. M10, M11, M12, M13
1	J231	J231	70460231	2N5951-3586-J231 40V N-CHANNEL FET T&A Q1
1	6530	6531	70466531	MPS-6531 TO92 NPN TRANS. Q2
1	6533	6534	70466533	MPS-6533/34 TO-92 PNP TRANS T&A Q3
1	2N3919	3919	70463919	SKA-3919 TO92 NPN TRANS T&A Q4
1	J174	J174	70460174	J-174 30V TO-92 P-CHAN FET T&A Q5
1	J111	J111	70460111	J-111 35V TO-92 NFET LOW T&A Q6
1	J174	J174	70460174	J-174 30V TO-92 P-CHAN FET T&A Q7
1	6530	6531	70466531	MPS-6531 TO92 NPN TRANS. Q8
2	22K	22K	70240029	22K-1/4W-5%—CF-T&R R1, R2
1	150K	150K	70240035	150K-1/4W-5%—CF-T&R R3
1	1.5K	1.5K	70240018	1.5K-1/4W-5%—CF-T&R R4
1	220K	220K	70240036	220K-1/4W-5%—CF-T&R R5
1	68K	68K	70240032	68K-1/4W-5%—CF-T&R R6
2	220K	220K	70240036	220K-1/4W-5%—CF-T&R R7, R8
1	2.2M	2.2M	70240040	2.2M-1/4W-5%—CF-T&R R9
1	10K	10K	70240025	10K-1/4W-5%—CF-T&R R10
1	2.2M	2.2M	70240040	2.2M-1/4W-5%—CF-T&R R11
1	1M	1M	70240039	1M—1/4W-5%—CF-T&R R12
1	100K	100K	70240034	100K-1/4W-5%—CF-T&R R13
1	1.5K	1.5K	70240018	1.5K-1/4W-5%—CF-T&R R14
1	1M	1M	70240039	1M—1/4W-5%—CF-T&R R15
2	470K	470K	70240038	470K-1/4W-5%—CF-T&R R17, R18
1	47K	47K	70240031	47K-1/4W-5%—CF-T&R R19
1	150K	150K	70240035	150K-1/4W-5%—CF-T&R R20
1	1.5K	1.5K	70240018	1.5K-1/4W-5%—CF-T&R R21
1	680K	680K	70240065	680K—1/4W-5%—CF-T&R R22
1	1M	1M	70240039	1M—1/4W-5%—CF-T&R R23
1	100K	100K	70240034	100K-1/4W-5%—CF-T&R R24
1	1.5K	1.5K	70240018	1.5K-1/4W-5%—CF-T&R R25
1	47K	47K	70240031	47K-1/4W-5%—CF-T&R R26
1	10K	10K	70240025	10K-1/4W-5%—CF-T&R R27
1	100K	100K	70240034	100K-1/4W-5%—CF-T&R R28
1	150K	150K	70240035	150K-1/4W-5%—CF-T&R R29
1	220K	220K	70240036	220K-1/4W-5%—CF-T&R R30
1	240K	240K	70241094	240K-1/4W-5%—CF-T&R R31
3	100K	100K	70240034	100K-1/4W-5%—CF-T&R R32, R33, R34
1	10K	10K	70240025	10K-1/4W-5%—CF-T&R R35
1	220K	220K	70240036	220K-1/4W-5%—CF-T&R R36
1	10	10	70240003	10—1/4W-5%—CF-T&R R37
1	4.7K	4.7K	70240023	4.7K-1/4W-5%—CF-T&R R38
1	10	10	70240003	10—1/4W-5%—CF-T&R R39
1	4.7K	4.7K	70240023	4.7K-1/4W-5%—CF-T&R R40
1	220	220	70240058	220-1/4W-5%—CF-T&R R41
1	1K	1K	70240017	1K—1/4W-5%—CF-T&R R42
1	100K	100K	70240034	100K-1/4W-5%—CF-T&R R43
1	270	270	70240013	270-1/4W-5%—CF-T&R R44
1	22K	22K	70240029	22K-1/4W-5%—CF-T&R R45
1	10K	10K	70240025	10K-1/4W-5%—CF-T&R R46
1	2.2M	2.2M	70240040	2.2M-1/4W-5%—CF-T&R R47
1	10K	10K	70240025	10K-1/4W-5%—CF-T&R R48
1	4.7K	4.7K	70240023	4.7K-1/4W-5%—CF-T&R R49
1	10K	10K	70240025	10K-1/4W-5%—CF-T&R R50
1	270	270	70240013	270-1/4W-5%—CF-T&R R52
1	100W1	100W1	70210003	100-1W—5%—MO-T&R R53
1	330W2R	330W2R	70250074	330-RSS2W-5%-MO-AXL R54
1	100	100	70240010	100-1/4W-5%—CF-T&R R55
1	1.5KW1	1.5KW1	70210007	1.5K-1W—5%—MO-T&R R56
1	100	100	70240010	100-1/4W-5%—CF-T&R R57

1	330W2R	330W2R	70250074	330-RSS2W-5%-MO-AXL R58
1	470K	470K	70240038	470K-1/4W-5%--CF-T&R R59
1	100K	100K	70240034	100K-1/4W-5%--CF-T&R R60
1	1.5K	1.5K	70240018	1.5K-1/4W-5%--CF-T&R R61
1	1M	1M	70240039	1M--1/4W-5%--CF-T&R R62
1	10K	10K	70240025	10K-1/4W-5%--CF-T&R R63
1	1K	1K	70240017	1K--1/4W-5%--CF-T&R R64
1	22KW1	22KW1	70210005	22K-1W--5%--MO-T&R R65
1	470K	470K	70240038	470K-1/4W-5%--CF-T&R R66
1	470	470	70240015	470-1/4W-5%--CF-T&R R67
1	68K	68K	70240032	68K-1/4W-5%--CF-T&R R68
1	100K	100K	70240034	100K-1/4W-5%--CF-T&R R69
2	68K	68K	70240032	68K-1/4W-5%--CF-T&R R70, R71
2	220K	220K	70240036	220K-1/4W-5%--CF-T&R R72, R73
1	68K	68K	70240032	68K-1/4W-5%--CF-T&R R84
1	4.7K	4.7K	70240023	4.7K-1/4W-5%--CF-T&R R85
2	220KW1	220KW1	70210008	220K-1W--5%--MO-T&R R86, R87
1	4KW5	4KW5	70250050	4K-5W-10%-WW-AXL R89
2	22KW1	22KW1	70210005	22K-1W--5%--MO-T&R R90, R91
1	4.7K	4.7K	70240023	4.7K-1/4W-5%--CF-T&R R92
1	1.5KW1	1.5KW1	70210007	1.5K-1W--5%--MO-T&R R95
2	220W1	220W1	70210019	220-1W--5%--MO-T&R R96, R97
1	470	470	70240015	470-1/4W-5%--CF-T&R R98
1	47K	47K	70240031	47K-1/4W-5%--CF-T&R R99
1	220KW1	220KW1	70210008	220K-1W--5%--MO-T&R R100
1	2.2M	2.2M	70240040	2.2M-1/4W-5%--CF-T&R R101
1	4.7K	4.7K	70240023	4.7K-1/4W-5%--CF-T&R R102
1	1.5K	1.5K	70240018	1.5K-1/4W-5%--CF-T&R R103
1	1.5KW1	1.5KW1	70210007	1.5K-1W--5%--MO-T&R R104
1	470K	470K	70240038	470K-1/4W-5%--CF-T&R R105
1	220KW1	220KW1	70210008	220K-1W--5%--MO-T&R R106
2	4.7K	4.7K	70240023	4.7K-1/4W-5%--CF-T&R R107, R108
1	1M	1M	70240039	1M--1/4W-5%--CF-T&R R200
1	47	47	70240008	47--1/4W-5%--CF-T&R R201
2	100K	100K	70240034	100K-1/4W-5%--CF-T&R R202, R203
1	1K	1K	70240017	1K--1/4W-5%--CF-T&R R204
1	100K	100K	70240034	100K-1/4W-5%--CF-T&R R300
2	22FP	22FP	70240100	22FP-1/4W-5%--FP-- R301, R302
1	330	330	70240014	330-1/4W-5%--CF-T&R R303
1	10K	10K	70240025	10K-1/4W-5%--CF-T&R R500
1	22K	22K	70240029	22K-1/4W-5%--CF-T&R R501
1	470K	470K	70240038	470K-1/4W-5%--CF-T&R R502
1	1M	1M	70240039	1M--1/4W-5%--CF-T&R R503
2	DRASW	DRASW	71322256	PC MNT SWITCH DUAL S1, S2
5	375SOW	70900295	70900295	SPACER, 3/8,R(#4),.187 SWAGE ALUM. SO1, SO2, SO3, SO4, SO5
1	4558	4558	70404558	IC RC-4558, P DUAL BI-PKG 10 U1
4	12AX7	12AX7	70806612	12AX7 VACUUM TUBE W/9 PIN PC MNT SOCKET V1, V2, V3, V4
1	1MAVBP5	71190522	71190522	1 MEG AUD MIN VPC 5% TAPER W/BRKT VR1
1	250KAVB	71190514	71190514	250K AUD MIN VPC W/BRACKET VR2
1	50KBVB	71190511	71190511	50K LIN MIN VPC W/BRACKET VR3
1	250KBVB	71190515	71190515	250K LIN MIN VPC W/BRACKET VR4
1	50KAVB	71190512	71190512	50K AUD MIN VPC W/BRACKET VR5
1	100KBVB	71190517	71190517	100K LIN MIN VPC W/BRACKET VR6
1	1MAVBP5	71190522	71190522	1 MEG AUD MIN VPC 5% TAPER W/BRKT VR7
1	100KBVB	71190517	71190517	100K LIN MIN VPC W/BRACKET VR8
3	250KBVB	71190515	71190515	250K LIN MIN VPC W/BRACKET VR9, VR10, VR11
1	10KBVB	71190510	71190510	10K LIN MIN VPC W/BRACKET VR12
1	250KBVB	71190515	71190515	250K LIN MIN VPC W/BRACKET VR13

****

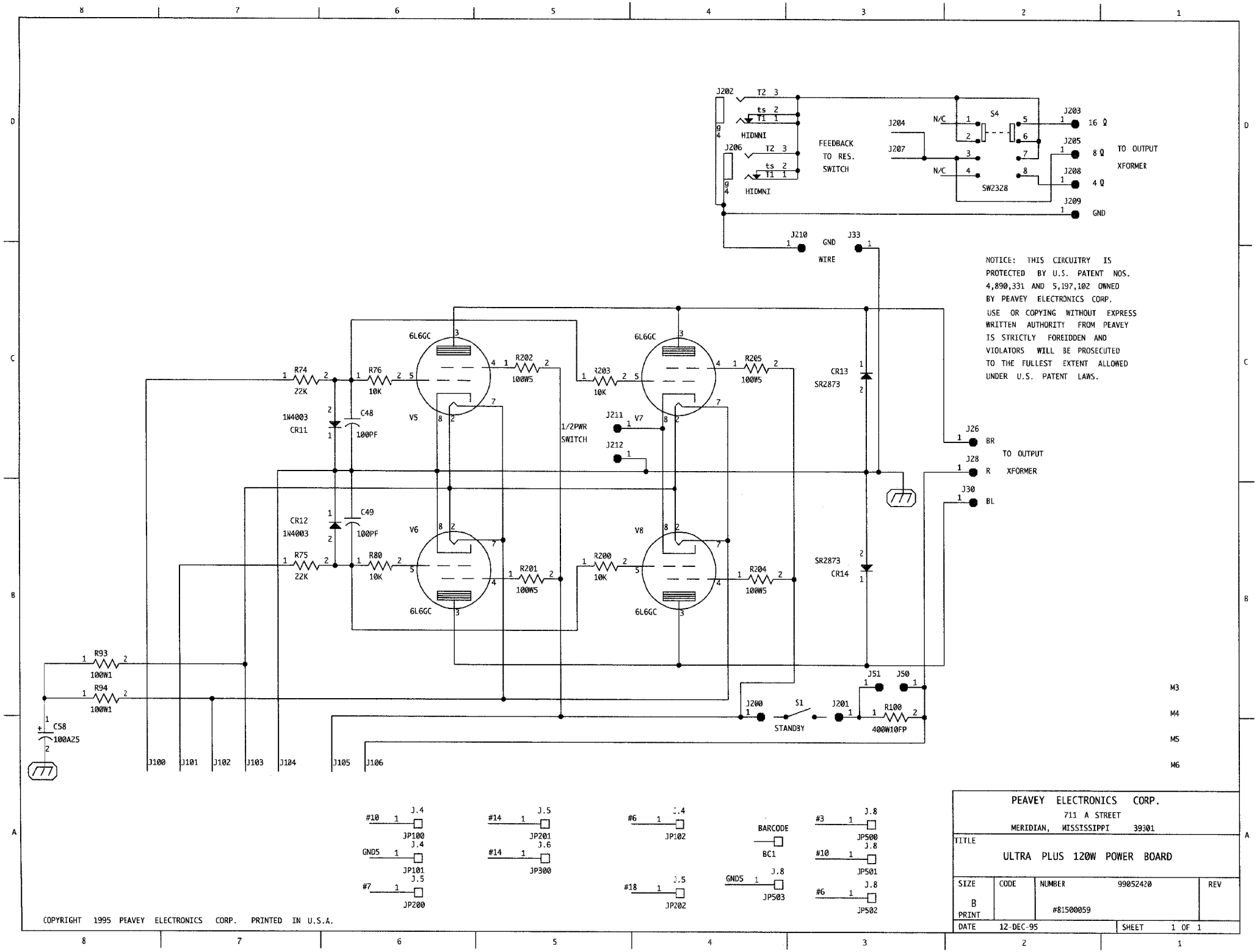
J202
T2 3
ts 2
T1 1
HIDWNI
J206
FEEDBACK
TO RES.
SWITCH
J204
J207
N/C
S4
SW2328
J203
16 Ω
J205
8 Ω
J208
4 Ω
J209
GND
TO OUTPUT
XFORMER
J210
GND
WIRE
J33
NOTICE: THIS CIRCUITRY IS PROTECTED BY U.S. PATENT NOS. 4,890,331 AND 5,197,102 OWNED BY PEAVEY ELECTRONICS CORP. USE OR COPYING WITHOUT EXPRESS WRITTEN AUTHORITY FROM PEAVEY IS STRICTLY FOREIDDEN AND VIOLATORS WILL BE PROSECUTED TO THE FULLEST EXTENT ALLOWED UNDER U.S. PATENT LAWS.
6L6GC
R74
22K
R76
10K
R202
100W5
R203
10K
R205
100W5
CR13
SR2873
1W4003
CR11
C48
100PF
V5
1/2PWR
SWITCH
J211
V7
J212
J26
BR
J28
R
J30
BL
TO OUTPUT
XFORMER
CR12
1W4003
C49
100PF
V6
V8
R75
22K
R80
10K
R201
100W5
R200
10K
R204
100W5
SR2873
CR14
R93
100W1
R94
100W1
C58
100A25
J51
J50
J200
S1
STANDBY
J201
R100
400W10FP
J100
J101
J102
J103
J104
J105
J106
M3
M4
M5
M6
#10
J.4
JP100
GND5
JP101
#7
JP200
#14
J.5
JP201
#14
J.6
JP300
#6
JP102
#18
JP202
BARCODE
BC1
GND5
J.8
JP503
#3
JP500
#10
JP501
#6
JP502
PEAVEY ELECTRONICS CORP.
711 A STREET
MERIDIAN, MISSISSIPPI 39301
TITLE
ULTRA PLUS 120W POWER BOARD
SIZE
B
PRINT
CODE
NUMBER
99052420
#81500059
REV
DATE
12-DEC-95
SHEET
1 OF 1
COPYRIGHT 1995 PEAVEY ELECTRONICS CORP. PRINTED IN U.S.A.

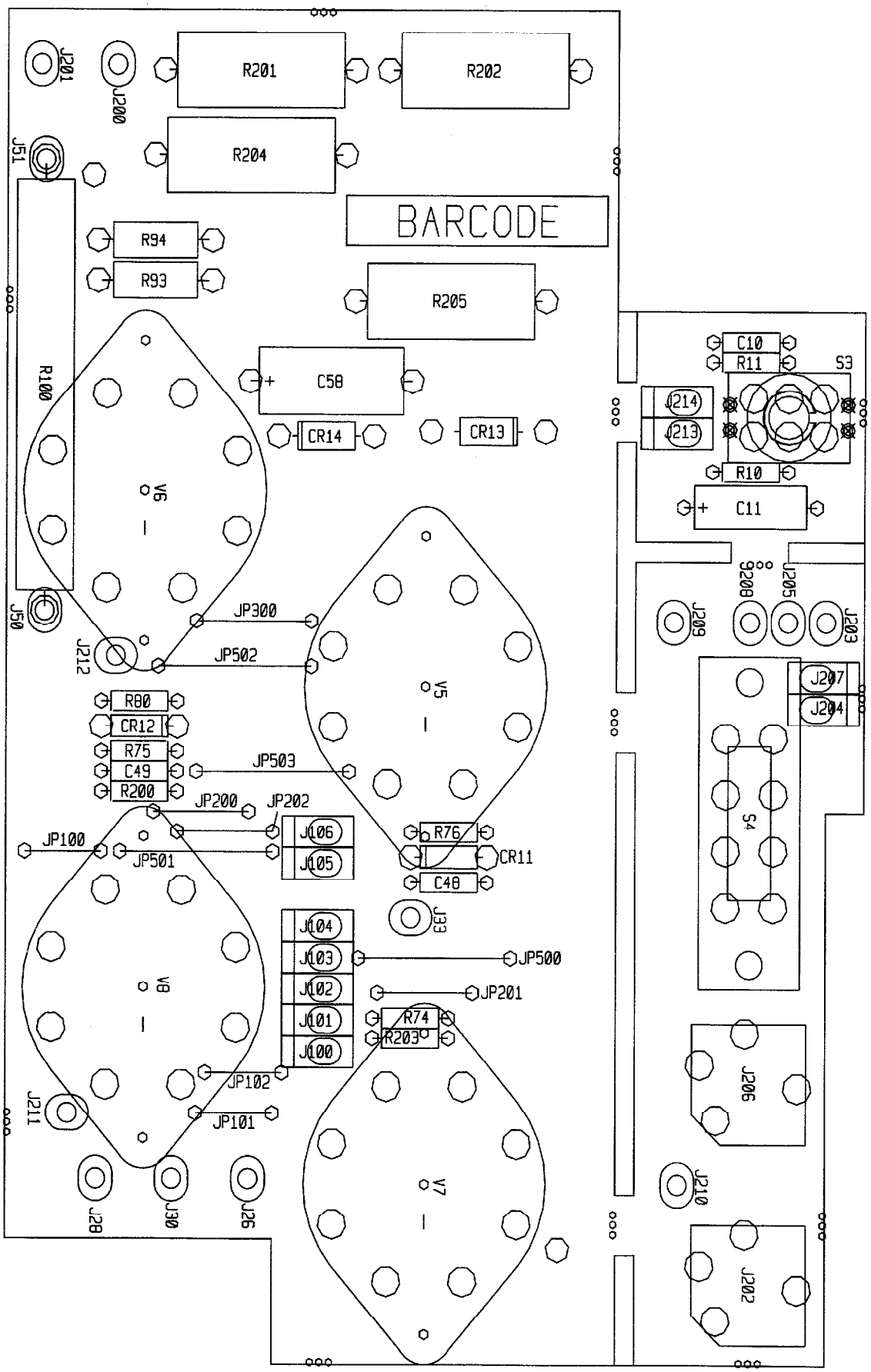
ULTRA PLUS 120W PWR
BARCODE
R201
R202
R204
R205
R94
R93
R100
C58
CR14
CR13
C10
R11
S3
J214
J213
R10
C11
J201
J200
J51
J50
J212
V6
V5
V8
V7
JP300
JP502
JP503
JP200
JP202
JP100
JP501
JP500
JP201
JP102
JP101
R80
CR12
R75
C49
R200
J106
J105
R76
CR11
C48
J33
J104
J103
J102
J101
J100
R74
R203
J211
J28
J30
J26
J209
J208
J205
J203
J207
J204
S4
J206
J210
J202

B I L L O F M A T E R I A L S R E P O R T

BOARD NAME: ULTRA 120PWR

* QTY.	PART NAME	PART VALUE	PART NUMBER	DESCRIPTION AND DEVICE DESIGNATIONS **********
1	.0047	.0047	70340007	.0047MF-10%--50VDC--MON--T&R C10
1	22A25	22A25	70320012	22MFD +/-20% 25VDC EL AXL C11
2	100PF	100PF	70340054	100PF--10%--50VDC--T/C--T&R C48, C49
1	100A25	100A25	70320014	100 MFD 25VDC LYTIC CAP C58
2	1N4003	1N4003	70464003	1N4003 200V SILICON DIODE CR11, CR12
2	SR2873	SR2873	70402873	SR2873 2KV, 250MA SILICON DIODE CR13, CR14
6	MMPD	73711812	73711812	R93-12 PN C.B. MALE MOLEX PIN J26, J28, J30, J33, J50, J51
7	SPX1D	SPX1D	73717003	1 STAKE PIN J100, J101, J102, J103, J104, J105, J106
2	MMPD	73711812	73711812	R93-12 PN C.B. MALE MOLEX PIN J200, J201
1	HIDMNI	71466214	71466214	2 TIP HID JACK NINS W/SPD J202
1	MMPD	73711812	73711812	R93-12 PN C.B. MALE MOLEX PIN J203
1	SPX1D	SPX1D	73717003	1 STAKE PIN J204
1	MMPD	73711812	73711812	R93-12 PN C.B. MALE MOLEX PIN J205
1	HIDMNI	71466214	71466214	2 TIP HID JACK NINS W/SPD J206
1	SPX1D	SPX1D	73717003	1 STAKE PIN J207
5	MMPD	73711812	73711812	R93-12 PN C.B. MALE MOLEX PIN J208, J209, J210, J211, J212
2	SPX1D	SPX1D	73717003	1 STAKE PIN J213, J214
1	82K	82K	70240033	82K-1/4W-5%--CF T&R R10
1	330K	330K	70240037	330K-1/4W-5%--CF-T&R R11
2	22K	22K	70240029	22K-1/4W-5%--CF-T&R R74, R75
2	10K	10K	70240025	10K-1/4W-5%--CF-T&R R76, R80
2	100W1	100W1	70210003	100-1W--5%--MO-T&R R93, R94
1	400W10FP	400W10FP	70250019	400-10W-10%-FP-AXL R100
1	10K	10K	70240025	10K-1/4W-5%--CF-T&R R200
2	100W5	100W5	70250006	100-5W-10%-WW-AXL R201, R202
1	10K	10K	70240025	10K-1/4W-5%--CF-T&R R203
2	100W5	100W5	70250006	100-5W-10%-WW-AXL R204, R205
1	SW2368	71322368	71322368	SPTT TOGGLE SWITCH S3
1	SW2328	SW2328	71322328	2PTT PC MOUNT SLIDE SWITCH S4
4	6L6GC	6L6GC	70806604	6L6GC VACUUM TUBE W/8 PIN SOCKET V5, V6, V7, V8

****

LAST REF. NUM USED: FN UN R3 CR72 JNN SW RELAY 2

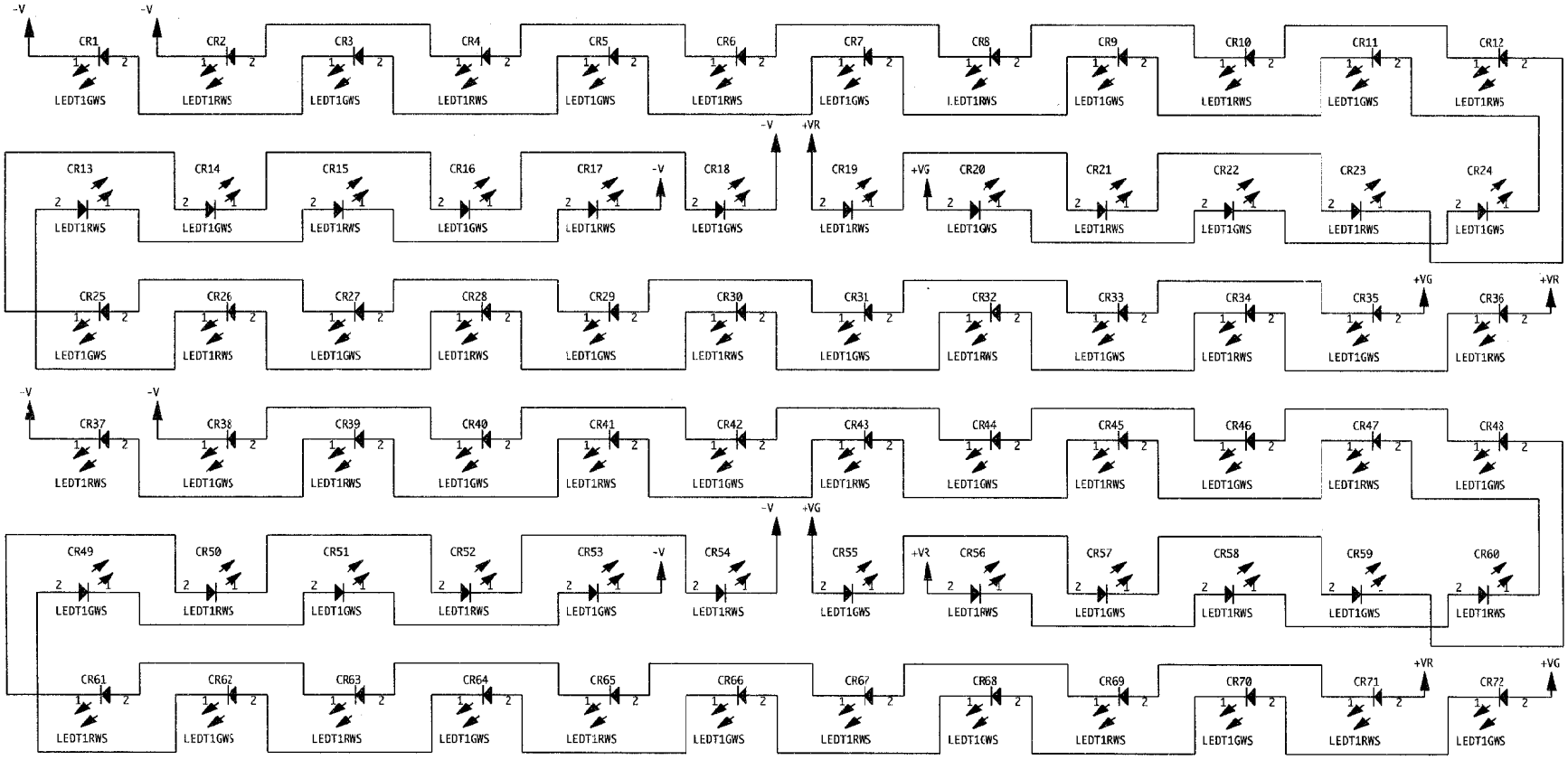

NOTICE: THIS CIRCUITRY IS PROTECTED BY U.S. PATENT NOS. 4,890,331 AND 5,197,102 OWNED BY PEAVEY ELECTRONICS CORP.USE OR COPYING WITHOUT EXPRESS WRITTEN AUTHORITY FROM PEAVEY IS STRICTLY FORBIDDEN AND VIOLATORS WILL BE PROSECUTED TO THE FULLEST EXTENT ALLOWED UNDER U.S. PATENT LAWS.

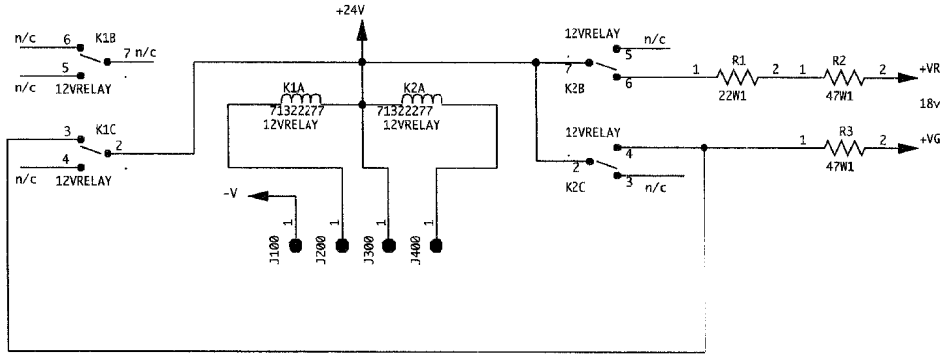

PEAVEY ELECTRONICS CORP.
711 A STREET
MERIDIAN, MISSISSIPPI 39301

TITLE
ULTRA PLUS LED

SIZE	CODE	NUMBER	REV
B PRINT		#81500059	
DATE 10-APR-96		SHEET 1 OF 1	

COPYRIGHT 1995 PEAVEY ELECTRONICS CORP. PRINTED IN U.S.A.

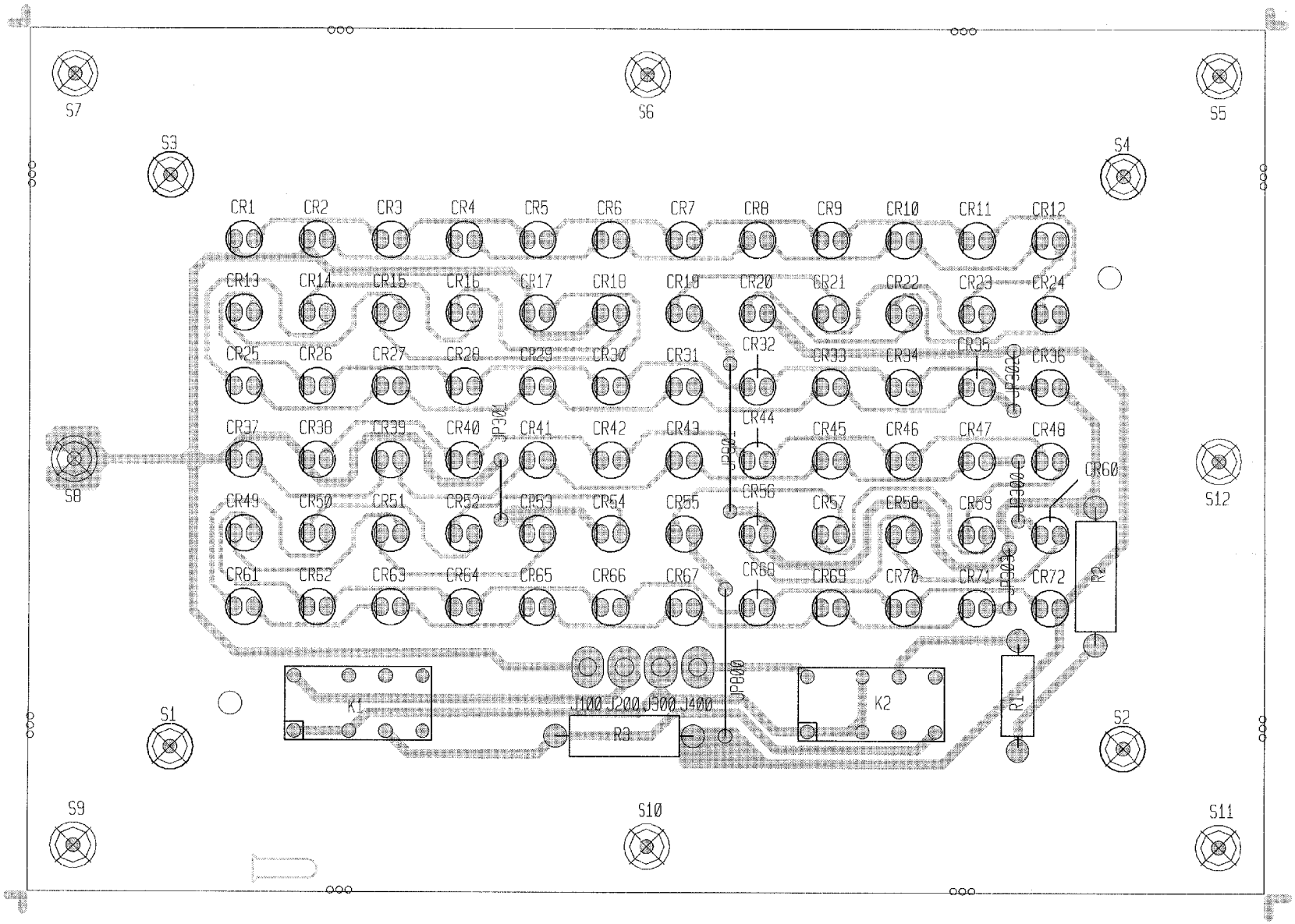

Ultra Plus L.E.D.

BOARD NAME: ULTRA PLUS LED

** QTY.	PART NAME	VALUE	PART NUMBER	DESCRIPTION AND DEVICE DESIGNATIONS **********
1	LEDT1GWS	LEDT1GWS	70450043	LED,T1,GREEN W/ 0.170" SPCR CR1
1	LEDT1RWS	LEDT1RWS	70450042	LED (LTL-16G-E) T1 RED W/ 0.170" SPACER T&A CR2
1	LEDT1GWS	LEDT1GWS	70450043	LED,T1,GREEN W/ 0.170" SPCR CR3
1	LEDT1RWS	LEDT1RWS	70450042	LED (LTL-16G-E) T1 RED W/ 0.170" SPACER T&A CR4
1	LEDT1GWS	LEDT1GWS	70450043	LED,T1,GREEN W/ 0.170" SPCR CR5
1	LEDT1RWS	LEDT1RWS	70450042	LED (LTL-16G-E) T1 RED W/ 0.170" SPACER T&A CR6
1	LEDT1GWS	LEDT1GWS	70450043	LED,T1,GREEN W/ 0.170" SPCR CR7
1	LEDT1RWS	LEDT1RWS	70450042	LED (LTL-16G-E) T1 RED W/ 0.170" SPACER T&A CR8
1	LEDT1GWS	LEDT1GWS	70450043	LED,T1,GREEN W/ 0.170" SPCR CR9
1	LEDT1RWS	LEDT1RWS	70450042	LED (LTL-16G-E) T1 RED W/ 0.170" SPACER T&A CR10
1	LEDT1GWS	LEDT1GWS	70450043	LED,T1,GREEN W/ 0.170" SPCR CR11
2	LEDT1RWS	LEDT1RWS	70450042	LED (LTL-16G-E) T1 RED W/ 0.170" SPACER T&A CR12, CR13
1	LEDT1GWS	LEDT1GWS	70450043	LED,T1,GREEN W/ 0.170" SPCR CR14
1	LEDT1RWS	LEDT1RWS	70450042	LED (LTL-16G-E) T1 RED W/ 0.170" SPACER T&A CR15
1	LEDT1GWS	LEDT1GWS	70450043	LED,T1,GREEN W/ 0.170" SPCR CR16
1	LEDT1RWS	LEDT1RWS	70450042	LED (LTL-16G-E) T1 RED W/ 0.170" SPACER T&A CR17
1	LEDT1GWS	LEDT1GWS	70450043	LED,T1,GREEN W/ 0.170" SPCR CR18
1	LEDT1RWS	LEDT1RWS	70450042	LED (LTL-16G-E) T1 RED W/ 0.170" SPACER T&A CR19
1	LEDT1GWS	LEDT1GWS	70450043	LED,T1,GREEN W/ 0.170" SPCR CR20
1	LEDT1RWS	LEDT1RWS	70450042	LED (LTL-16G-E) T1 RED W/ 0.170" SPACER T&A CR21
1	LEDT1GWS	LEDT1GWS	70450043	LED,T1,GREEN W/ 0.170" SPCR CR22
1	LEDT1RWS	LEDT1RWS	70450042	LED (LTL-16G-E) T1 RED W/ 0.170" SPACER T&A CR23
2	LEDT1GWS	LEDT1GWS	70450043	LED,T1,GREEN W/ 0.170" SPCR CR24, CR25
1	LEDT1RWS	LEDT1RWS	70450042	LED (LTL-16G-E) T1 RED W/ 0.170" SPACER T&A CR26
1	LEDT1GWS	LEDT1GWS	70450043	LED,T1,GREEN W/ 0.170" SPCR CR27
1	LEDT1RWS	LEDT1RWS	70450042	LED (LTL-16G-E) T1 RED W/ 0.170" SPACER T&A CR28
1	LEDT1GWS	LEDT1GWS	70450043	LED,T1,GREEN W/ 0.170" SPCR CR29
1	LEDT1RWS	LEDT1RWS	70450042	LED (LTL-16G-E) T1 RED W/ 0.170" SPACER T&A CR30
1	LEDT1GWS	LEDT1GWS	70450043	LED,T1,GREEN W/ 0.170" SPCR CR31
1	LEDT1RWS	LEDT1RWS	70450042	LED (LTL-16G-E) T1 RED W/ 0.170" SPACER T&A CR32
1	LEDT1GWS	LEDT1GWS	70450043	LED,T1,GREEN W/ 0.170" SPCR CR33
1	LEDT1RWS	LEDT1RWS	70450042	LED (LTL-16G-E) T1 RED W/ 0.170" SPACER T&A CR34
1	LEDT1GWS	LEDT1GWS	70450043	LED,T1,GREEN W/ 0.170" SPCR CR35
2	LEDT1RWS	LEDT1RWS	70450042	LED (LTL-16G-E) T1 RED W/ 0.170" SPACER T&A CR36, CR37
1	LEDT1GWS	LEDT1GWS	70450043	LED,T1,GREEN W/ 0.170" SPCR CR38
1	LEDT1RWS	LEDT1RWS	70450042	LED (LTL-16G-E) T1 RED W/ 0.170" SPACER T&A CR39
1	LEDT1GWS	LEDT1GWS	70450043	LED,T1,GREEN W/ 0.170" SPCR CR40
1	LEDT1RWS	LEDT1RWS	70450042	LED (LTL-16G-E) T1 RED W/ 0.170" SPACER T&A CR41
1	LEDT1GWS	LEDT1GWS	70450043	LED,T1,GREEN W/ 0.170" SPCR CR42
1	LEDT1RWS	LEDT1RWS	70450042	LED (LTL-16G-E) T1 RED W/ 0.170" SPACER T&A CR43
1	LEDT1GWS	LEDT1GWS	70450043	LED,T1,GREEN W/ 0.170" SPCR CR44
1	LEDT1RWS	LEDT1RWS	70450042	LED (LTL-16G-E) T1 RED W/ 0.170" SPACER T&A CR45
1	LEDT1GWS	LEDT1GWS	70450043	LED,T1,GREEN W/ 0.170" SPCR CR46
1	LEDT1RWS	LEDT1RWS	70450042	LED (LTL-16G-E) T1 RED W/ 0.170" SPACER T&A CR47
2	LEDT1GWS	LEDT1GWS	70450043	LED,T1,GREEN W/ 0.170" SPCR CR48, CR49
1	LEDT1RWS	LEDT1RWS	70450042	LED (LTL-16G-E) T1 RED W/ 0.170" SPACER T&A CR50
1	LEDT1GWS	LEDT1GWS	70450043	LED,T1,GREEN W/ 0.170" SPCR CR51
1	LEDT1RWS	LEDT1RWS	70450042	LED (LTL-16G-E) T1 RED W/ 0.170" SPACER T&A CR52
1	LEDT1GWS	LEDT1GWS	70450043	LED,T1,GREEN W/ 0.170" SPCR CR53
1	LEDT1RWS	LEDT1RWS	70450042	LED (LTL-16G-E) T1 RED W/ 0.170" SPACER T&A CR54
1	LEDT1GWS	LEDT1GWS	70450043	LED,T1,GREEN W/ 0.170" SPCR CR55
1	LEDT1RWS	LEDT1RWS	70450042	LED (LTL-16G-E) T1 RED W/ 0.170" SPACER T&A CR56
1	LEDT1GWS	LEDT1GWS	70450043	LED,T1,GREEN W/ 0.170" SPCR CR57
1	LEDT1RWS	LEDT1RWS	70450042	LED (LTL-16G-E) T1 RED W/ 0.170" SPACER T&A CR58
1	LEDT1GWS	LEDT1GWS	70450043	LED,T1,GREEN W/ 0.170" SPCR CR59
2	LEDT1RWS	LEDT1RWS	70450042	LED (LTL-16G-E) T1 RED W/ 0.170" SPACER T&A CR60, CR61
1	LEDT1GWS	LEDT1GWS	70450043	LED,T1,GREEN W/ 0.170" SPCR CR62
1	LEDT1RWS	LEDT1RWS	70450042	LED (LTL-16G-E) T1 RED W/ 0.170" SPACER T&A CR63
1	LEDT1GWS	LEDT1GWS	70450043	LED,T1,GREEN W/ 0.170" SPCR CR64
1	LEDT1RWS	LEDT1RWS	70450042	LED (LTL-16G-E) T1 RED W/ 0.170" SPACER T&A CR65
1	LEDT1GWS	LEDT1GWS	70450043	LED,T1,GREEN W/ 0.170" SPCR CR66
1	LEDT1RWS	LEDT1RWS	70450042	LED (LTL-16G-E) T1 RED W/ 0.170" SPACER T&A CR67
1	LEDT1GWS	LEDT1GWS	70450043	LED,T1,GREEN W/ 0.170" SPCR CR68
1	LEDT1RWS	LEDT1RWS	70450042	LED (LTL-16G-E) T1 RED W/ 0.170" SPACER T&A CR69
1	LEDT1GWS	LEDT1GWS	70450043	LED,T1,GREEN W/ 0.170" SPCR CR70
1	LEDT1RWS	LEDT1RWS	70450042	LED (LTL-16G-E) T1 RED W/ 0.170" SPACER T&A CR71
1	LEDT1GWS	LEDT1GWS	70450043	LED,T1,GREEN W/ 0.170" SPCR CR72
4	MMPD	73711812	73711812	R93-12 PN C.B. MALE MOLEX PIN J100, J200, J300, J400
2	12VRELAY	71322277	71322277	DPDT OMRON RELAY 12VDC K1, K2
1	22W1	22W1	70210001	22—1W—5%—MO—T&R R1
2	47W1	47W1	70210011	47—1W—5%—MO—T&R R2, R3
4	250SOWHU	70901851	70901851	SPACER, 1/4,R(HW),.187 SWAGE ALUM. S1, S2, S3, S4
8	250SOWHD	70901851	70901851	SPACER, 1/4,R(HW),.187 SWAGE ALUM. S5, S6, S7, S8, S9, S10, S11, S12

****

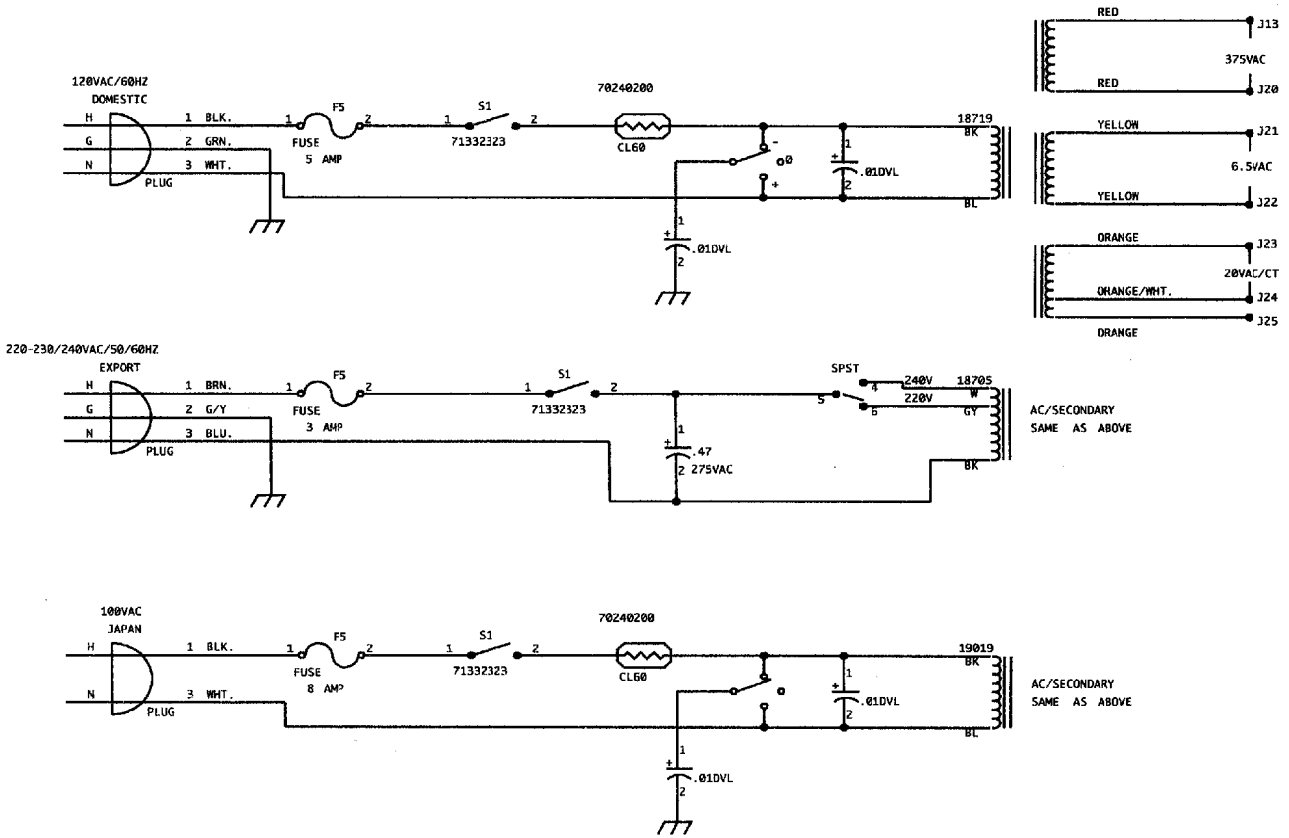

PEAVEY ELECTRONICS CORP.
711 A STREET
MERIDIAN, MISSISSIPPI 39301

TITLE
ULTRA PLUS/AC
PRIMARY & SECONDARY WIRING

SIZE	CODE	NUMBER	REV
B PRINT		#81500059	
DATE 10-APR-96		SHEET 1 OF 1	

COPYRIGHT 1995 PEAVEY ELECTRONICS CORP. PRINTED IN U.S.A.